FLORIDA PRODUCT APPROVAL #1844

IMPACT RATING
RATED FOR LARGE & SMALL MISSILE IMPACT RESISTANCE MISSILE LEVEL D, WINDZONE 4

DESIGN PRESSURE RATING
SEE TABLE 1

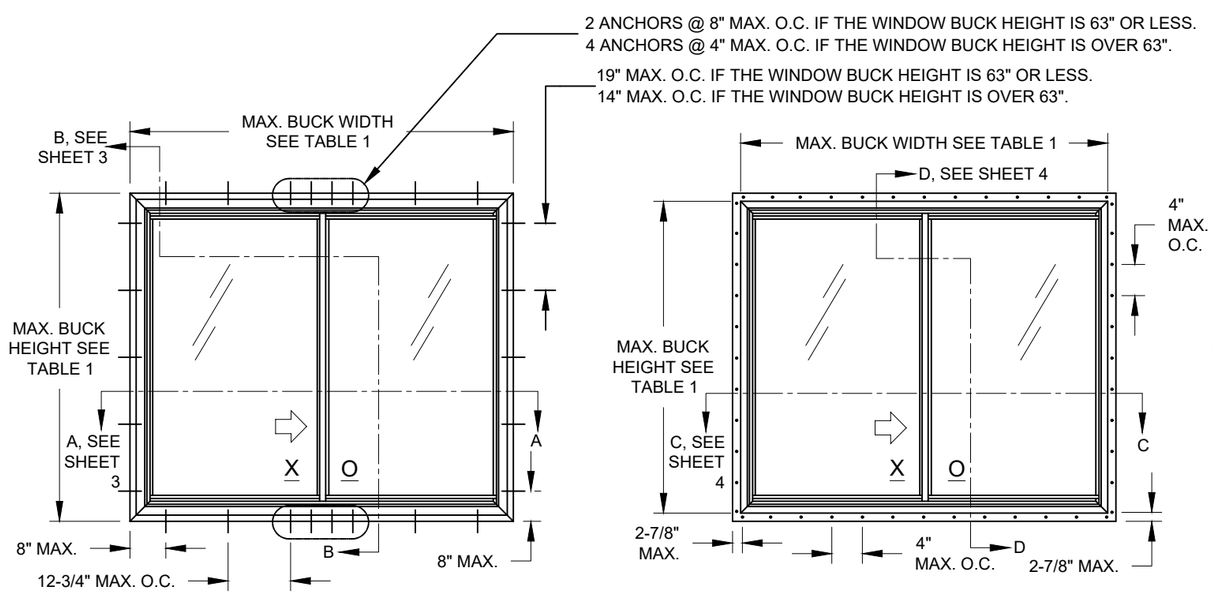

ELEVATION FOR TYP. EQUAL LEG/BOX & FLANGE FRAME, XO CONFIGURATION, OX SIMILAR

ELEVATION FOR TYP. FIN OR J-CHANNEL FRAME, XO CONFIGURATION, OX & XOX SIMILAR

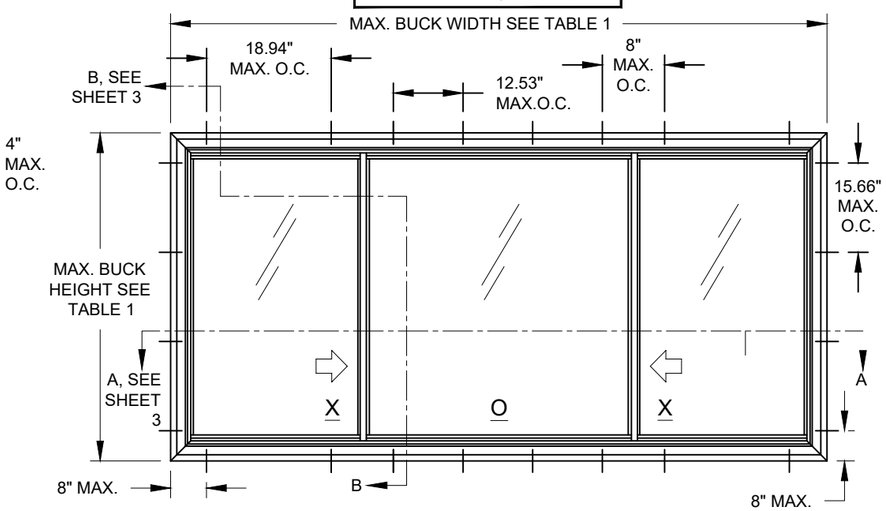

ELEVATION FOR TYP. EQUAL LEG/BOX & FLANGE FRAME, XOX CONFIGURATION

MAX. SASH WIDTH = 30.36"

MAX. FIXED LITE (BUCK WIDTH - [2 X SASH WIDTH]) = 59.28"

SERIES HR5510 IMPACT RESISTANT, VINYL HORIZONTAL ROLLER

1) THIS PRODUCT HAS BEEN DESIGNED & TESTED TO COMPLY WITH THE REQUIREMENTS OF THE CURRENT FLORIDA BUILDING CODE.

2) SHUTTERS ARE NOT REQUIRED WHEN USED IN WIND-BORNE DEBRIS REGIONS.

3) MASONRY ANCHORS MAY BE USED INTO WOOD AS PER TABLES 2 & 3. ALL WOOD BUCKS LESS THAN 1-1/2" THICK ARE TO BE CONSIDERED 1X INSTALLATIONS. 1X WOOD BUCKS ARE OPTIONAL IF UNIT IS INSTALLED DIRECTLY TO SUBSTRATE. WOOD BUCKS DEPICTED AS 2X ARE 1-1/2" THICK OR GREATER. 1X AND 2X BUCKS (WHEN USED) SHALL BE DESIGNED TO PROPERLY TRANSFER LOADS TO THE STRUCTURE. WOOD BUCK DESIGN AND INSTALLATION IS THE RESPONSIBILITY OF THE ENGINEER OR ARCHITECT OF RECORD.

4) ANCHOR EMBEDMENT TO BASE MATERIAL SHALL BE BEYOND WALL DRESSING OR STUCCO. USE ANCHORS OF SUFFICIENT LENGTH. ANCHORS AND FRAME CORNERS SHOULD BE SEALED. OVERALL SEALING/FLASHING STRATEGY FOR WATER RESISTANCE OF INSTALLATION SHALL BE DONE BY OTHERS AND IS BEYOND THE SCOPE OF THESE INSTRUCTIONS.

5) SHIMS ARE REQUIRED AT EACH ANCHOR LOCATION WHERE THE PRODUCT IS NOT FLUSH TO THE SUBSTRATE. USE SHIMS CAPABLE OF TRANSFERRING APPLIED LOADS. WOOD BUCKS, BY OTHERS, MUST BE SUFFICIENTLY ANCHORED TO RESIST LOADS IMPOSED ON THEM BY THE WINDOW.

6) THE ANCHORAGE METHODS SHOWN HAVE BEEN DESIGNED TO RESIST THE WIND LOADS CORRESPONDING TO THE REQUIRED DESIGN PRESSURE. THE 33-1/3% STRESS INCREASE HAS NOT BEEN USED IN THE DESIGN OF THIS PRODUCT. THE 1.6 LOAD DURATION FACTOR WAS USED FOR THE EVALUATION OF ANCHORS INTO WOOD. ANCHORS THAT COME INTO CONTACT WITH OTHER DISSIMILAR MATERIALS SHALL MEET THE REQUIREMENTS OF THE FLORIDA BUILDING CODE FOR CORROSION RESISTANCE.

7) FRAMES FLANGES OR INTEGRAL FINS MAY BE TRIMMED IN-FIELD TO CREATE AN EQUAL-LEG FRAME.

TABLE 1:

Window Buck Size		Configuration	Reinf. Level	Design Pressure		Glass Types	Product Rating
Width	Height			(+) psf	(-) psf		
75"	63"	XO/OX	R3	50.0	50.0	5-8	LC-PG50
75"	63"	XO/OX	R4	60.0	60.0	5	LC-PG60
75"	63"	XO/OX	R4	65.0	70.0	5-8	LC-PG65
75"	72"	XO/OX	R4	50.0	50.0	5-8	LC-PG50
120"	63"	XOX (1/4-1/2-1/4)	R3	45.0	45.0	5	LC-PG45
92"	63"	XOX (1/3-1/3-1/3)					
120"	63"	XOX (1/4-1/2-1/4)	R3	50.0	50.0	5-8	LC-PG50
92"	63"	XOX (1/3-1/3-1/3)					
120"	63"	XOX (1/4-1/2-1/4)	R4	65.0	65.0	7	LC-PG65
92"	63"	XOX (1/3-1/3-1/3)					
120"	63"	XOX (1/4-1/2-1/4)	R4	65.0	70.0	7 & 8	LC-PG65
92"	63"	XOX (1/3-1/3-1/3)					

SEE SHEET 2 FOR GLASS TYPES

Revision: D) NO CHANGES ON THIS SHEET.

PREPARED BY A. LYNN MILLER
1070 TECHNOLOGY DRIVE
N. VENICE, FL 34275
(941) 480-1600
REGISTRATION #29296

PGT Custom Windows and Doors
1070 TECHNOLOGY DRIVE
N. VENICE, FL 34275
(941) 480-1600

Series	Title	Sheet	DWG No.	Rev.
HR5510	GENERAL NOTES & ELEVATION. VINYL HORIZONTAL ROLLER WINDOW (LM)	1 OF 4	HR5510FPA-LM	D

Drawn By: A. MORLESIN
Date: 06/12/11

ANTHONY LYNN MILLER
LICENSE
No. 58705
STATE OF FLORIDA
PROFESSIONAL ENGINEER
10/11/23

A. LYNN MILLER, P.E.
P.E.# 58705

TABLE 2: ANCHORS INSTALLED THROUGH FRAME

Anchor	Substrate	Min. Edge Distance	Min. Embedment
#10 SMS (steel, 18-8 S.S. or 410 S.S.) **Max. DP of 50.0 psf**	P.T. Southern Pine (SG=0.55)	7/16"	1-3/8"
	Steel, A36	3/8"	0.050"
	Steel Stud, A653 Gr. 33	3/8"	0.0346" (20 Ga.)
	Aluminum, 6063-T5	3/8"	0.0713" (14 Ga.)
#12 SMS (steel, 18-8 S.S. or 410 S.S.)	P.T. Southern Pine (SG=0.55)	9/16"	1-3/8"
	Steel, A36	3/8"	0.050"
	Steel Stud, A653 Gr. 33	3/8"	0.0346" (20 Ga.)
	Aluminum, 6063-T5	3/8"	0.0713" (14 Ga.)
3/16" Ultracon+ **Max. DP of 50.0 psf**	P.T. Southern Pine (SG=0.55)	7/16"	1-3/8"
	Concrete (min. 3 ksi)	1"	1-3/8"
	Ungrouted CMU, (ASTM C-90)	1"	1-1/4"
1/4" Ultracon+	P.T. Southern Pine (SG=0.55)	1"	1-3/8"
	Concrete (min. 3 ksi)	1-3/16"	1-3/4"
	Ungrouted CMU, (ASTM C-90)	1"	1-1/4"
1/4" Crete-Flex (410 S.S.)	P.T. Southern Pine (SG=0.55)	1"	1-3/8"
	Concrete (min. 3.35 ksi)	1"	1-3/4"
	Ungrouted CMU, (ASTM C-90)	2-1/2"	1-1/4"
1/4" Aggre-Gator (18-8 S.S.)	Concrete (min. 3.275 ksi)	1-1/2"	1-3/8"
	P.T. Southern Pine (SG=0.55)	1"	1-3/8"
	Ungrouted CMU, (ASTM C-90)	2"	1-1/4"

TABLE 3: ANCHORS INSTALLED THROUGH INTEGRAL FIN

Anchor	Substrate	Min. Edge Distance	Min. Embedment
2-1/2" x .131" Common Nail **Max. DP of 50.0**	P.T. Southern Pine (SG=.55)	9/16"	2-7/16"
2-1/2" x .131" Ring-shank Nail	P.T. Southern Pine (SG=.55)	9/16"	2-7/16"
2-1/2" x .145" Roofing Nail	P.T. Southern Pine (SG=.55)	9/16"	2-7/16"
#10 SMS (steel, 18-8 S.S. or 410 S.S.)	P.T. Southern Pine (SG=.55)	3/4"	1-3/8"
	Aluminum, 6063-T5	3/8"	0.0713" (14 Ga.)
	Steel Stud, Gr. 33	3/8"	0.0346" (20 Ga.)
	Steel, A36	3/8"	0.050"

1) PANHEAD, FLATHEAD OR HEXHEAD ARE ACCEPTABLE.

TABLE 4: REINFORCEMENT TYPES

Reinforcement		
Level	Vent (4 sides)	Meeting Rail
R3	B	E
R4	C	F

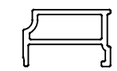

REINFORCEMENT TYPE B

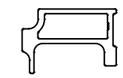

REINFORCEMENT TYPE C

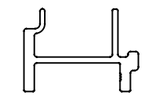

REINFORCEMENT TYPE E

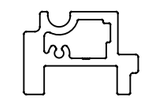

REINFORCEMENT TYPE F

1) "UNGROUTED CMU" VALUES MAY BE USED FOR GROUTED CMU APPLICATIONS.
2) ALL HEAD ANCHOR TYPES ARE ACCEPTABLE.
3) ANCHOR LENGTH TO BE SO THAT A MIN. OF 3 THREADS EXTEND BEYOND THE METAL SUBSTRATE.

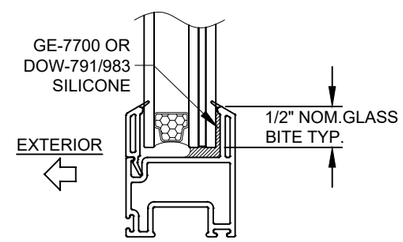

TYP. GLAZING DETAIL

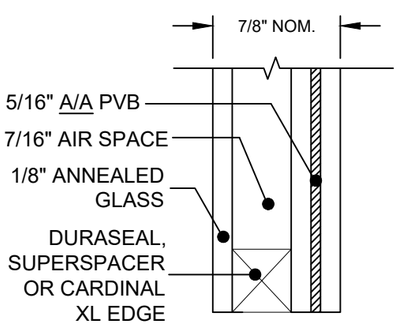

GLASS TYPE 5

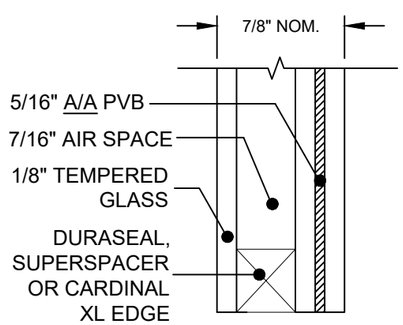

GLASS TYPE 6

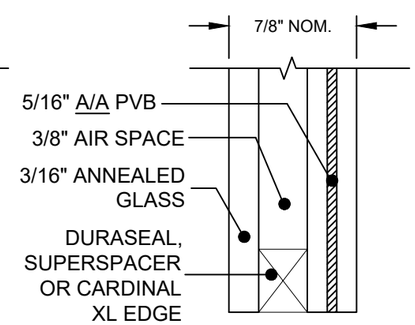

GLASS TYPE 7

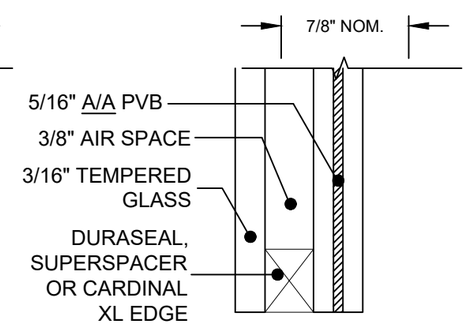

GLASS TYPE 8

Revision:

D) REMOVED 1/4" & 3/16" ULTRACON FROM ANCHOR TABLES.

PREPARED BY A. LYNN MILLER
1070 TECHNOLOGY DRIVE
N. VENICE, FL 34275
(941) 480-1600

REGISTRATION #29296

PGT Custom Windows and Doors
1070 TECHNOLOGY DRIVE
N. VENICE, FL 34275
(941) 480-1600

Series	Desc.	Title	Sheet	DWG No.	Rev.
HR5510	ANCHOR & GLAZING DETAILS.	VINYL HORIZONTAL ROLLER WINDOW (LM)	2 OF 4	HR5510FPA-LM	D

Drawn By: A. MORLESIN
Date: 06/12/11

ANTHONY LYNN MILLER
LICENSE
No. 58705
10/11/23
STATE OF FLORIDA
PROFESSIONAL ENGINEER

A. LYNN MILLER, P.E.
P.E.# 58705

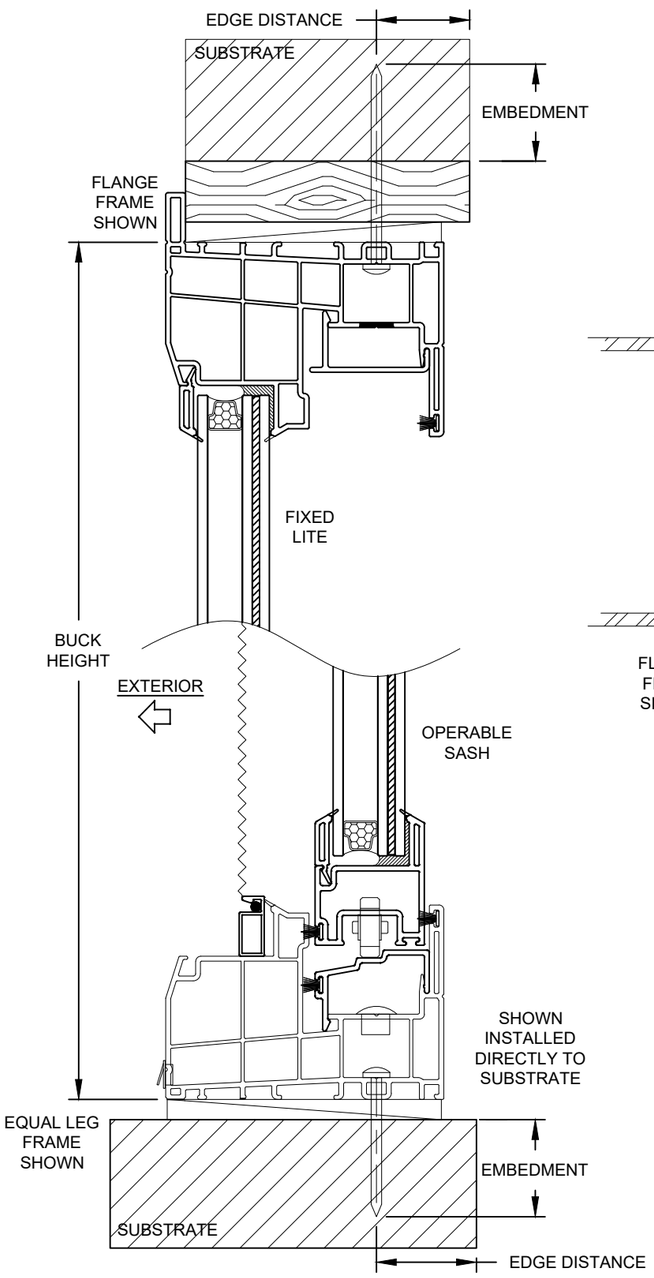

VERTICAL SECTION B-B

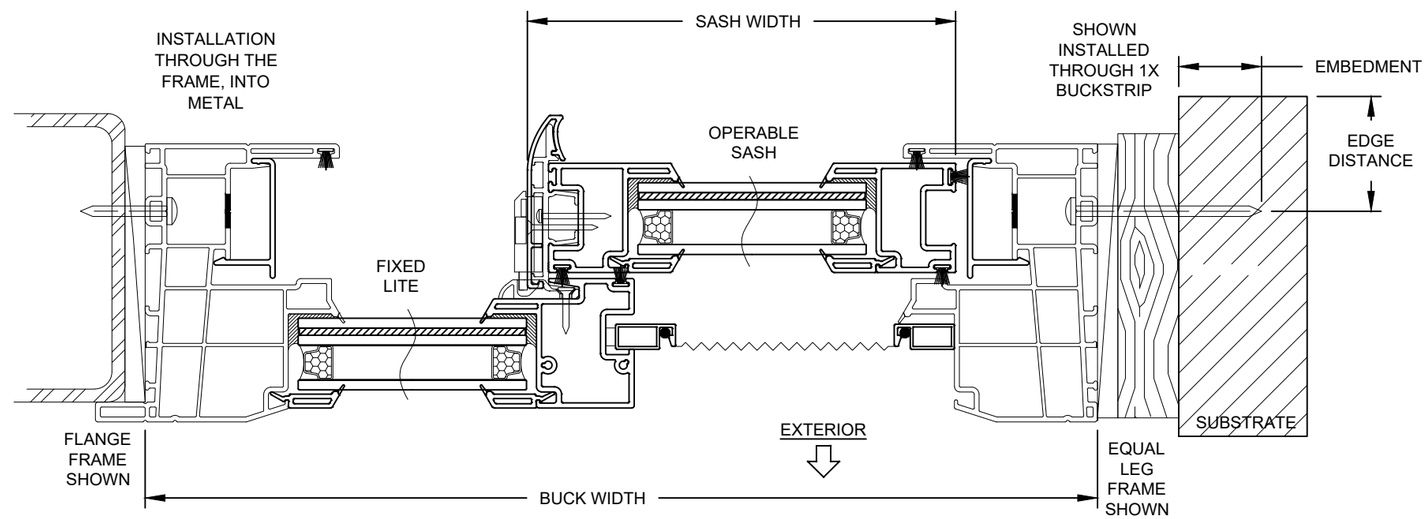

HORIZONTAL SECTION A-A (XO)

(OX & XOX SIMILAR)

INSTALLATION NOTES:

1) SEE SHEET 1 FOR SPACING REQUIREMENTS.
2) SEE TABLE(S) ON SHEET 2 FOR ANCHORAGE AND SUBSTRATE REQUIREMENTS.
3) MAX. SHIM THICKNESS TO BE 1/4".
4) GLASS SHOWN IS FOR ILLUSTRATIVE PURPOSES ONLY AND MAY DIFFER TO MEET DESIGN REQUIREMENTS.
5) FIN AND/OR FLANGE MAY BE REMOVED TO CREATE OTHER FRAME TYPES.

Revision:

D) NO CHANGES IN THIS SHEET.

PREPARED BY A. LYNN MILLER
1070 TECHNOLOGY DRIVE
N. VENICE, FL 34275
(941) 480-1600

REGISTRATION #29296

PGT Custom Windows and Doors
1070 TECHNOLOGY DRIVE
N. VENICE, FL 34275
(941) 480-1600

Series	HR5510
Sheet	3 OF 4
DWG No.	HR5510FPA-LM
Rev.	D
Date	06/12/11
Drawn By	A. MORLESIN
Title	VINYL HORIZONTAL ROLLER WINDOW (LM)
Desc.	FLANGE INSTALLATIONS.

ANTHONY LYNN MILLER
LICENSE
No. 58705
STATE OF FLORIDA
PROFESSIONAL ENGINEER
10/11/23

A. LYNN MILLER, P.E.
P.E.# 58705

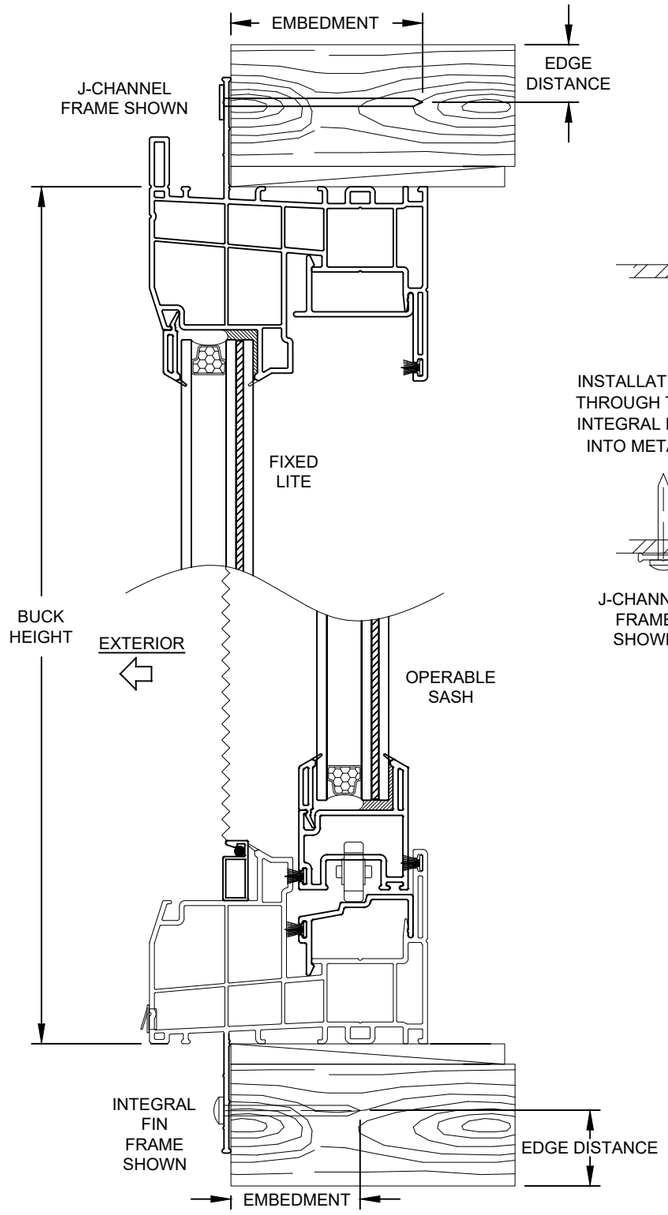

VERTICAL SECTION D-D

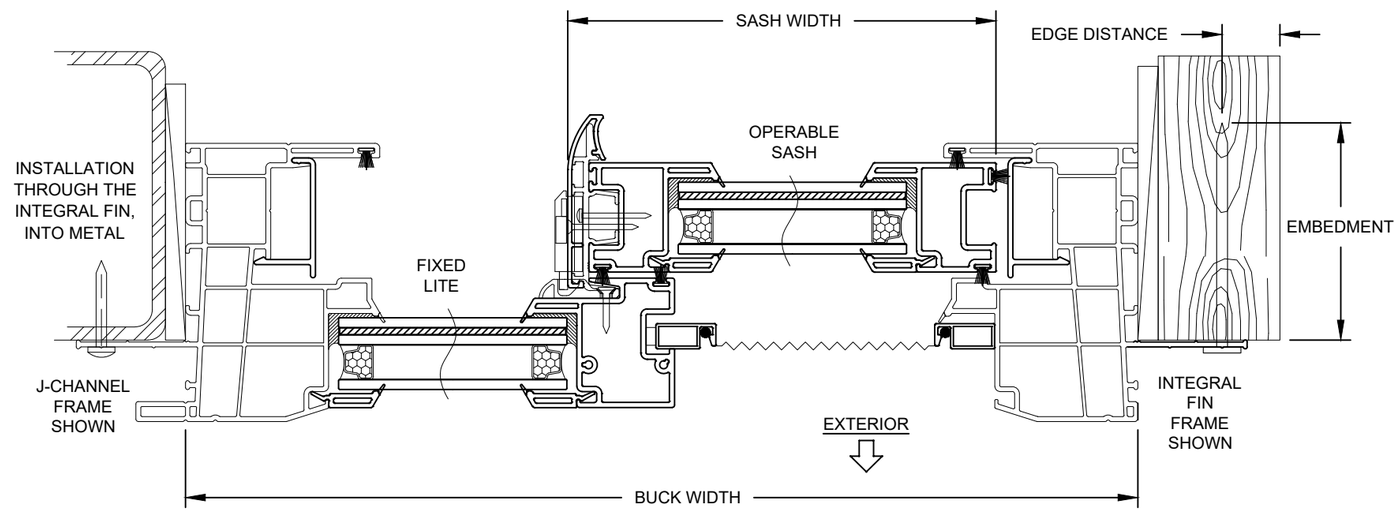

HORIZONTAL SECTION C-C (XO)
(OX & XOX SIMILAR)

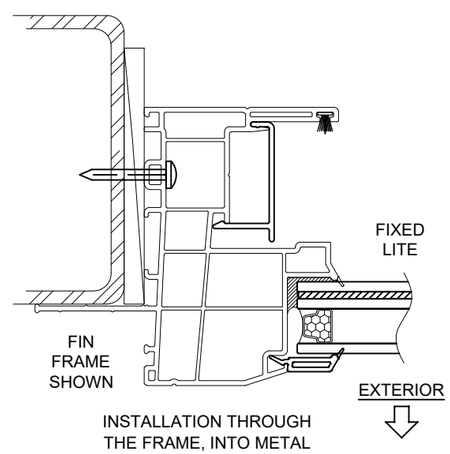

INSTALLATION THROUGH THE FRAME, INTO METAL (JAMB SHOWN, HEAD & SILL SIMILAR)

INSTALLATION NOTES:

1) SEE SHEET 1 FOR SPACING REQUIREMENTS.
2) SEE TABLE(S) ON SHEET 2 FOR ANCHORAGE AND SUBSTRATE REQUIREMENTS.
3) MAX. SHIM THICKNESS TO BE 1/4".
4) GLASS SHOWN IS FOR ILLUSTRATIVE PURPOSES ONLY AND MAY DIFFER TO MEET DESIGN REQUIREMENTS.
5) FIN AND/OR FLANGE MAY BE REMOVED TO CREATE OTHER FRAME TYPES.

Revision: D) NO CHANGES IN THIS SHEET.

PREPARED BY A. LYNN MILLER
1070 TECHNOLOGY DRIVE
N. VENICE, FL 34275
(941) 480-1600

REGISTRATION #29296

PGT Custom Windows and Doors
1070 TECHNOLOGY DRIVE
N. VENICE, FL 34275
(941) 480-1600

Title	VINYL HORIZONTAL ROLLER WINDOW (LM)
Date	06/12/11
Drawn By	A. MORLESIN
Desc.	FIN INSTALLATIONS.
Rev.	D
DWG No.	HR5510FPA-LM
Sheet	4 OF 4
Series	HR5510

ANTHONY LYNN MILLER
LICENSE
No. 58705
A. Lynn Miller
10/11/23
STATE OF FLORIDA
PROFESSIONAL ENGINEER

A. LYNN MILLER, P.E.
P.E.# 58705